SHD71 Single Phase Product Dimension

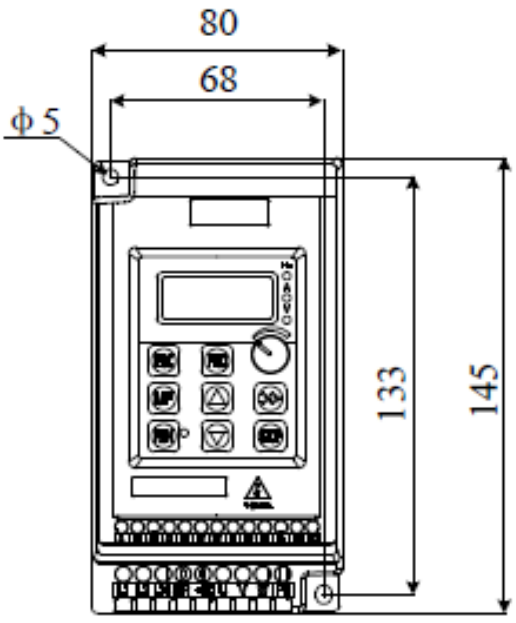

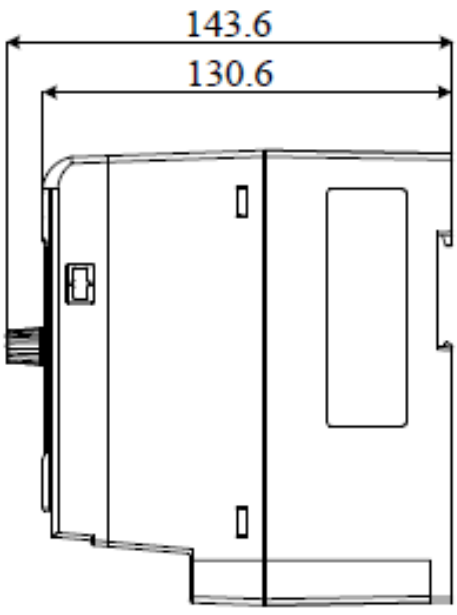

Model Number	W (mm)	H (mm)	D (mm)	A (mm)	B (mm)	Mounting HoleØ	Weight (kg)
SHD71-0.4-1Ph-IP20-220	80	145	143.6	133	68	Ø5	1.6
SHD71-0.75-1Ph-IP20-220	80	145	143.6	133	68	Ø5	1.6
SHD71-1.1-1Ph-IP20-220	80	145	143.6	133	68	Ø5	1.6

SHD71 Three Phase Product Dimension

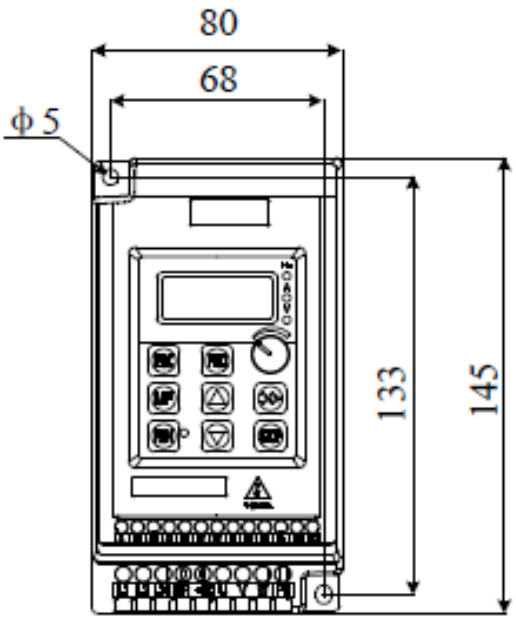

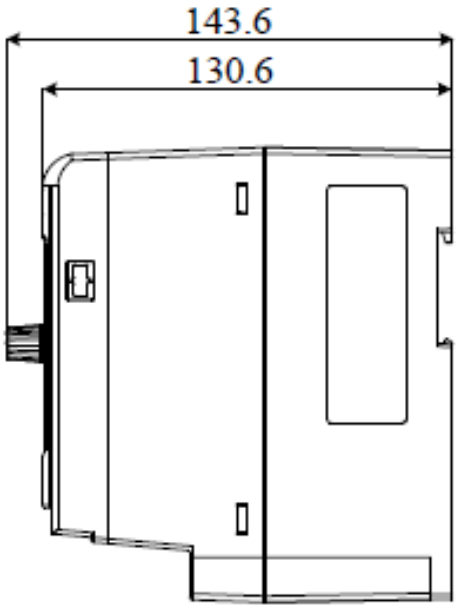

Model Number	W (mm)	H (mm)	D (mm)	A (mm)	B (mm)	Mounting HoleØ	Weight (kg)
SHD71-0.4-3Ph-IP20-380	80	145	143.6	133	68	Ø5	1.6
SHD71-0.75-3Ph-IP20-380	80	145	143.6	133	68	Ø5	1.6
SHD71-1.5-3Ph-IP20-380	80	145	143.6	133	68	Ø5	1.6

SHD700 Single Phase Product Dimension

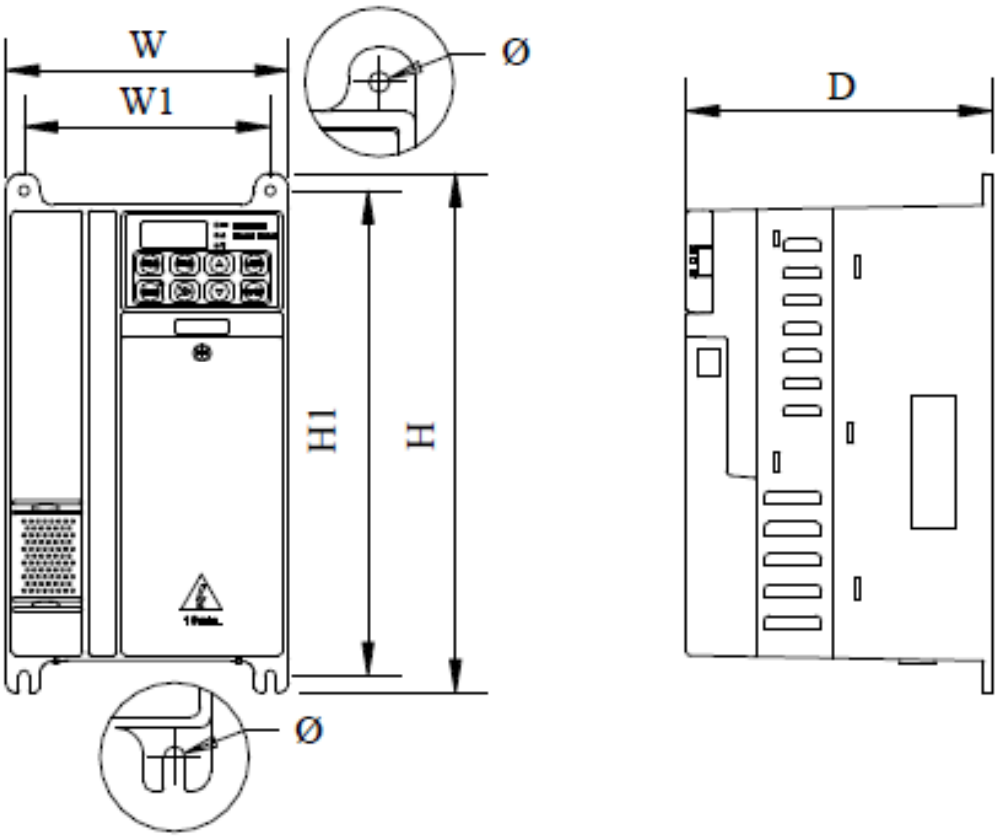

Model Number	W (mm)	H (mm)	D (mm)	W1 (mm)	H1 (mm)	Mounting HoleØ	Weight (kg)
SHD700-0.4-1Ph-IP20-220	97.4	202.4	148.8	80	190	5	1.4
SHD700-0.75-1Ph-IP20-220	97.4	202.4	148.8	80	190	5	1.4
SHD700-1.5-1Ph-IP20-220	97.4	202.4	148.8	80	190	5	1.4
SHD700-2.2-1Ph-IP20-220	142.4	220.4	155.5	123.5	208	5	2.2
SHD700-4-1Ph-IP20-220	163.1	300	176.8	142	280	6	4.5

SHD700 Three Phase Product Dimension

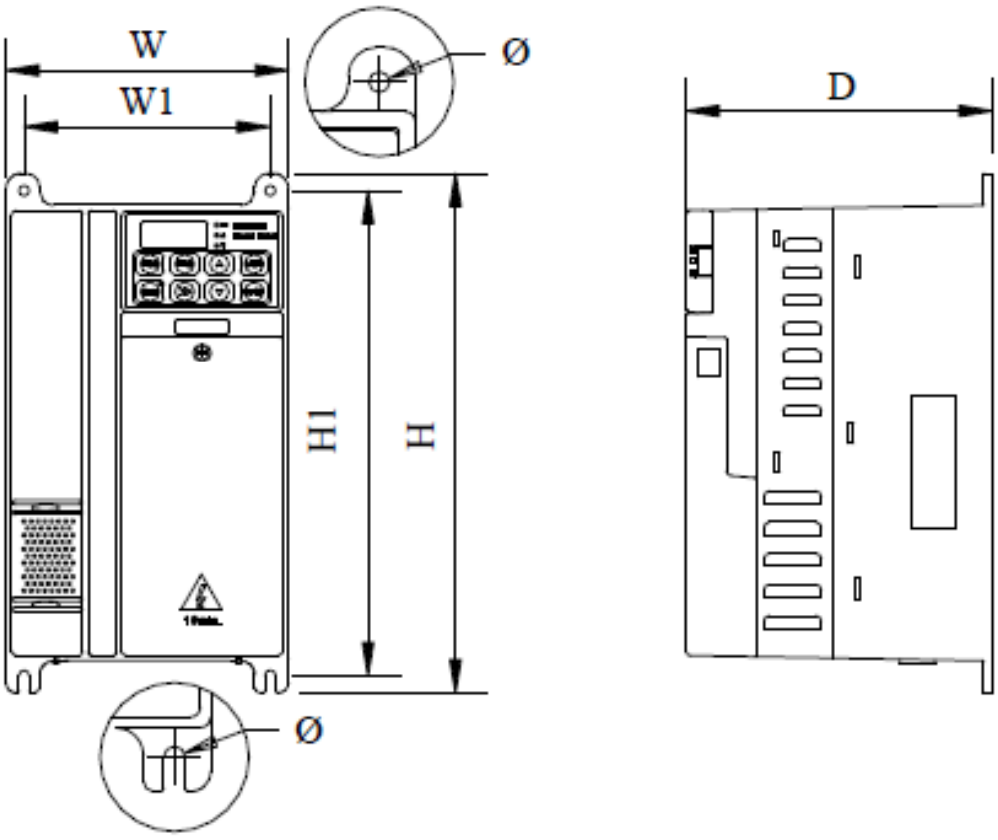

Model Number	W (mm)	H (mm)	D (mm)	W1 (mm)	H1 (mm)	Mounting HoleØ	Weight (kg)
SHD700-0.75-3Ph-IP20-380	97.4	202.4	148.8	80	190	5	1.4
SHD700-1.5-3Ph-IP20-380	97.4	202.4	148.8	80	190	5	1.4
SHD700-2.2-3Ph-IP20-380	142.4	220.4	155.5	123.5	208	5	2.2
SHD700-3.7-3Ph-IP20-380	142.4	220.4	155.5	123.5	208	5	2.2
SHD700-5.5-3Ph-IP20-380	163.1	300	176.8	142	280	6	4.5
SHD700-7.5-3Ph-IP20-380	163.1	300	176.8	142	280	6	4.5

SHD700 Three Phase Product Dimension

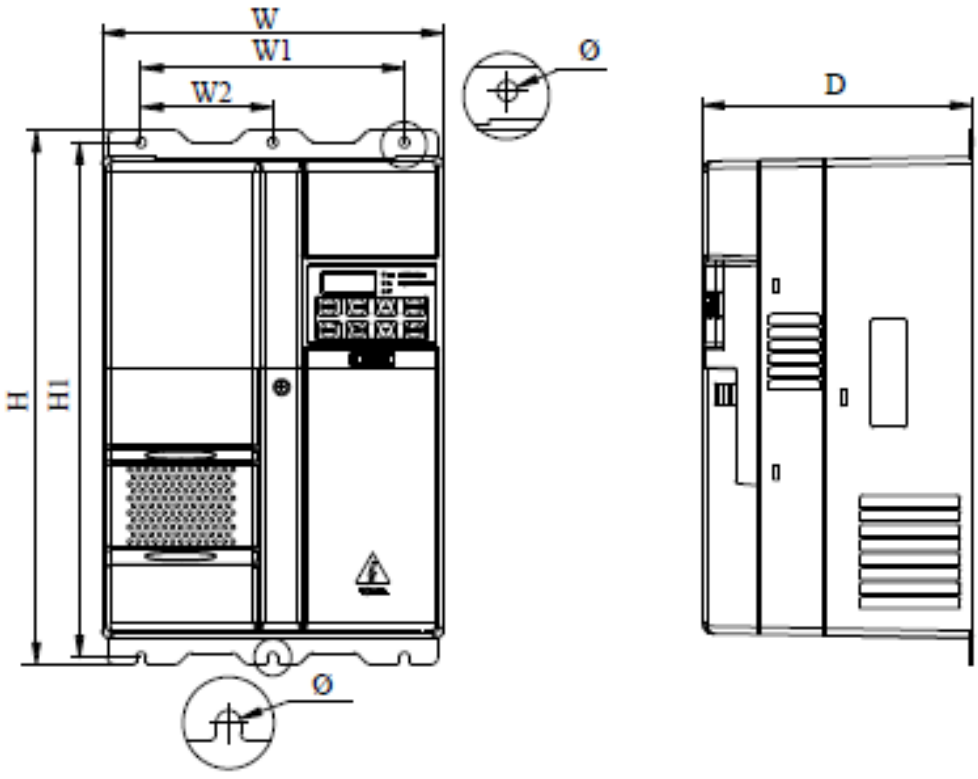

Model Number	W (mm)	H (mm)	D (mm)	W1 (mm)	H1 (mm)	W2 (mm)	Mounting HoleØ	Weight (kg)
SHD700-11-3Ph-IP20-380	238.5	370	189	184	356.5	92	7	8.8
SHD700-15-3Ph-IP20-380	238.5	370	189	184	356.5	92	7	8.8
SHD700-18.5-3Ph-IP20-380	238.5	435.5	200.3	184	422	92	7	12.1
SHD700-22-3Ph-IP20-380	238.5	435.5	200.3	184	422	92	7	12.1

SHD700 Three Phase Product Dimension

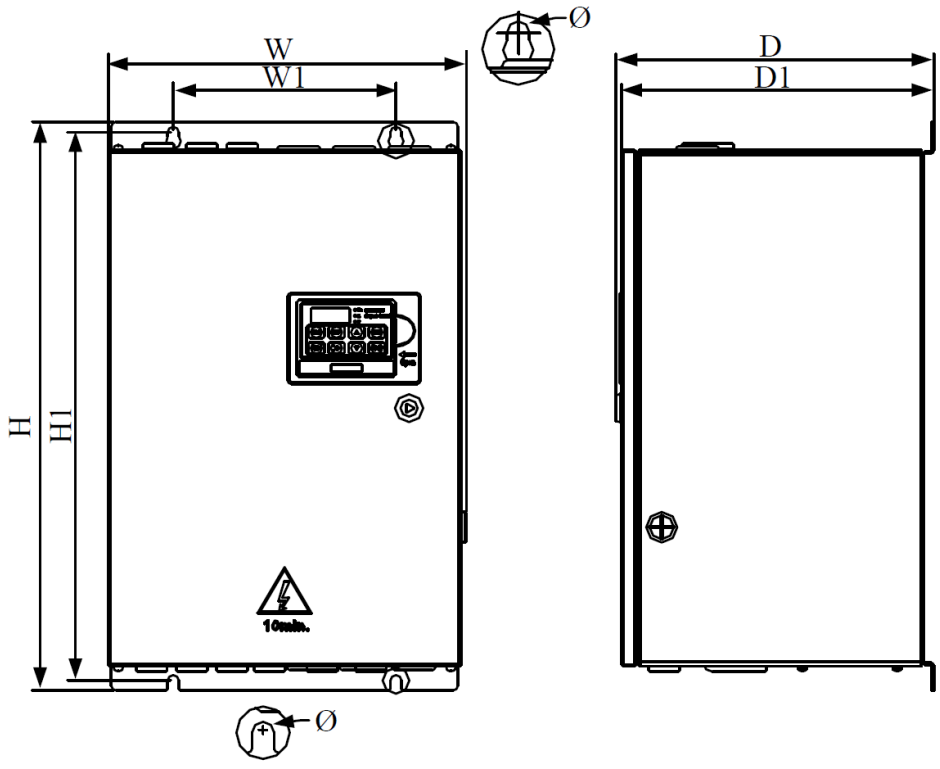

Model Number	W (mm)	H (mm)	D (mm)	W1 (mm)	H1 (mm)	Mounting HoleØ	Weight (kg)
SHD700-30-3Ph-IP20-380	355.5	573	315.5	221	552.5	10	40
SHD700-37-3Ph-IP20-380	355.5	573	315.5	221	552.5	10	40
SHD700-45-3Ph-IP20-380	355.5	573	315.5	221	552.5	10	40
SHD700-55-3Ph-IP20-380	355.5	573	315.5	221	552.5	10	40
SHD700-75-3Ph-IP20-380	355.5	573	315.5	221	552.5	10	40
SHD700-30-3PH-IP20-690	355.5	573	315.5	221	552.5	10	40
SHD700-37-3PH-IP20-690	355.5	573	315.5	221	552.5	10	40
SHD700-45-3PH-IP20-690	355.5	573	315.5	221	552.5	10	40
SHD700-55-3PH-IP20-690	355.5	573	315.5	221	552.5	10	40
SHD700-75-3PH-IP20-690	355.5	573	315.5	221	552.5	10	40

SHD700 Three Phase Product Dimension

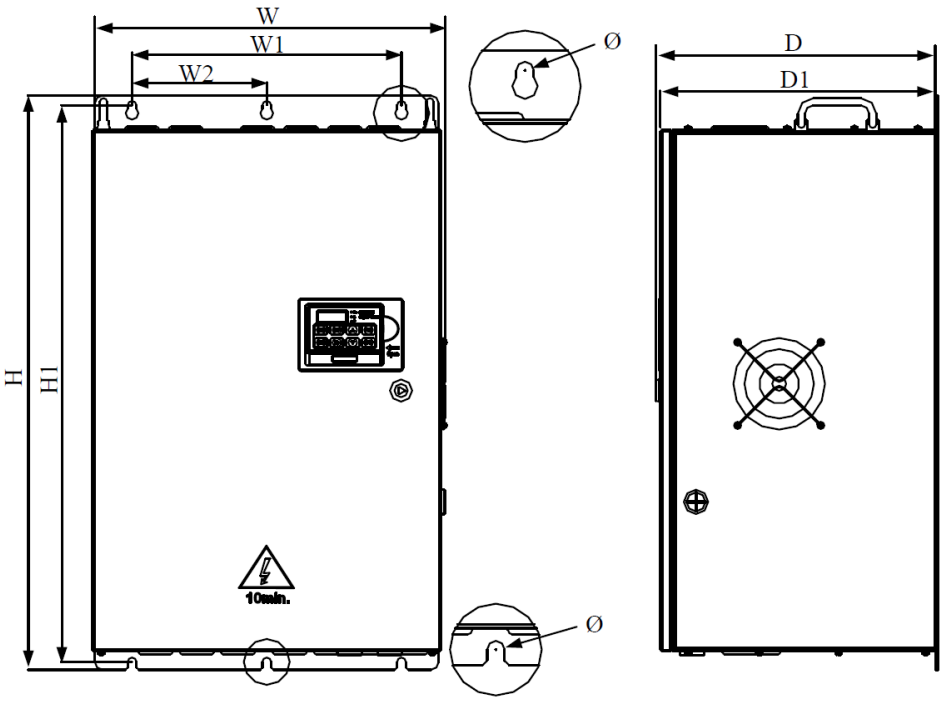

Model Number	W (mm)	H (mm)	D (mm)	W1 (mm)	H1 (mm)	W2 (mm)	Mounting HoleØ	Weight (kg)
SHD700-90-3Ph-IP20-380	445.6	725	355	340	701.5	170	10	63
SHD700-110-3Ph-IP20-380	445.6	725	355	340	701.5	170	10	63
SHD700-132-3Ph-IP20-380	445.6	725	355	340	701.5	170	10	63
SHD700-160-3Ph-IP20-380	640	1246.5	405.5	520	1207.5	175	13	150
SHD700-185-3Ph-IP20-380	640	1246.5	405.5	520	1207.5	175	13	150
SHD700-200-3Ph-IP20-380	640	1246.5	405.5	520	1207.5	175	13	150
SHD700-250-3Ph-IP20-380	640	1246.5	405.5	520	1207.5	175	13	150
SHD700-280-3Ph-IP20-380	640	1246.5	405.5	520	1207.5	175	13	150
SHD700-90-3PH-IP20-690	445.6	725	355	340	701.5	170	10	63
SHD700-110-3PH-IP20-690	445.6	725	355	340	701.5	170	10	63
SHD700-132-3PH-IP20-690	445.6	725	355	340	701.5	170	10	63
SHD700-160-3PH-IP20-690	640	1246.5	405.5	520	1207.5	175	13	150
SHD700-185-3PH-IP20-690	640	1246.5	405.5	520	1207.5	175	13	150
SHD700-200-3PH-IP20-690	640	1246.5	405.5	520	1207.5	175	13	150
SHD700-250-3PH-IP20-690	640	1246.5	405.5	520	1207.5	175	13	150
SHD700-280-3PH-IP20-690	640	1246.5	405.5	520	1207.5	175	13	150

SHD700 Three Phase Product Dimension

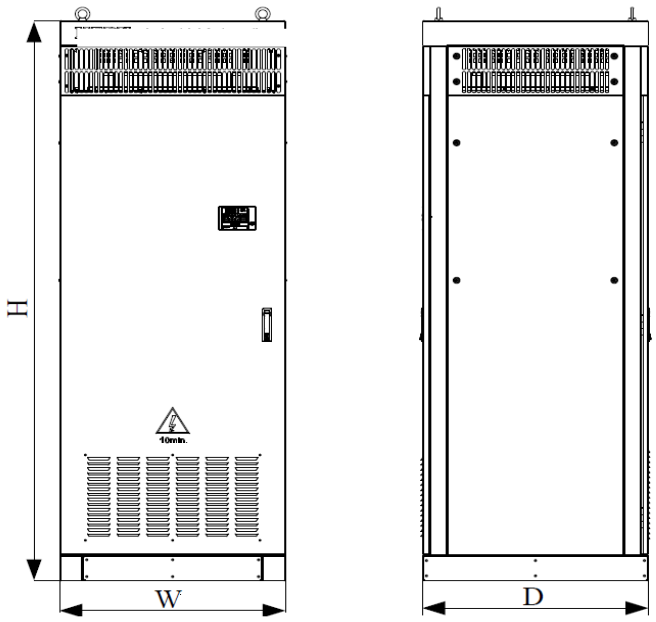

Model Number	W (mm)	H (mm)	D (mm)	Weight (kg)
SHD700-315-3Ph-IP20-380	808	2200	804	350
SHD700-355-3Ph-IP20-380	809	2201	805	351
SHD700-400-3Ph-IP20-380	810	2202	806	352
SHD700-450-3Ph-IP20-380	811	2203	807	353
SHD700-315-3PH-IP20-690	808	2200	804	354
SHD700-355-3PH-IP20-690	809	2201	805	355
SHD700-400-3PH-IP20-690	810	2202	806	356
SHD700-450-3PH-IP20-690	811	2203	807	357

SS900 Single Phase Product Dimension

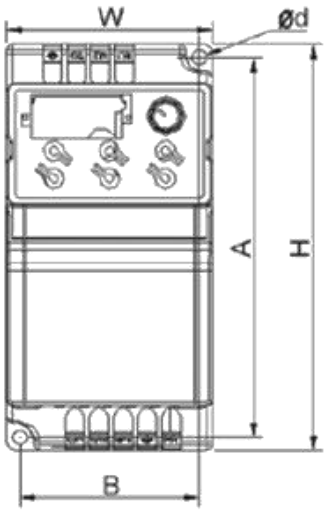

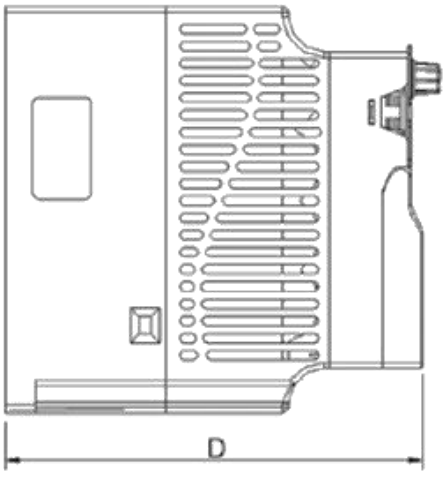

Model Number	W (mm)	H (mm)	D (mm)	A (mm)	B (mm)	Mounting HoleØ	Weight (kg)
SS900-0.4kW-1Ph-20-220	72	142	152	132.7	62.7	5	
SS900-0.75kW-1Ph-20-220	72	142	152	132.7	62.7	5	
SS900-1.5kW-1Ph-20-220	72	142	152	132.7	62.7	5	

SS900 Three Phase Product Dimension

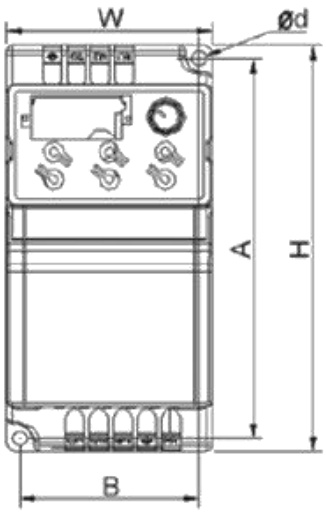

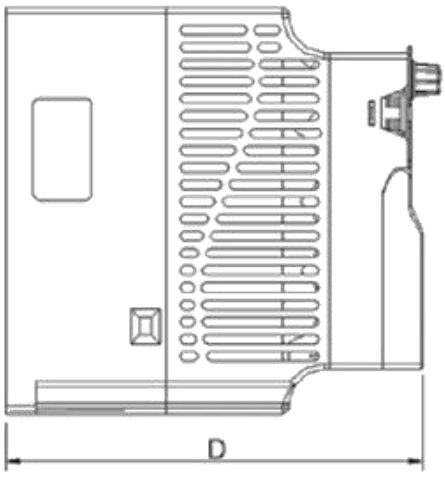

Model Number	W (mm)	H (mm)	D (mm)	A (mm)	B (mm)	Mounting HoleØ	Weight (kg)
SS900-0.75-3Ph-IP20-380	72	142	152	132.7	62.7	5	
SS900-1.5-3Ph-IP20-380	72	142	152	132.7	62.7	5	
SS900-2.2-3Ph-IP20-380	72	142	152	132.7	62.7	5	
SS900-3.7-3Ph-IP20-380	100	183	143	173	90	5	
SS900-5.5-3Ph-IP20-380	100	183	143	173	90	5	
SS900-7.5-3Ph-IP20-380	130	260	184	250	120	5	
SS900-11-3Ph-IP20-380	130	260	184	250	120	5	
SS900-15-3Ph-IP20-380	195	280	179	266	182.5	7	
SS900-18.5-3Ph-IP20-380	195	280	179	266	182.5	7	
SS900-22-3Ph-IP20-380	195	280	179	266	182.5	7	
SS900-30-3Ph-IP20-380	245	425	193	410	180	7	
SS900-37-3Ph-IP20-380	245	425	193	410	180	7	

SS1100 Single Phase Product Dimension

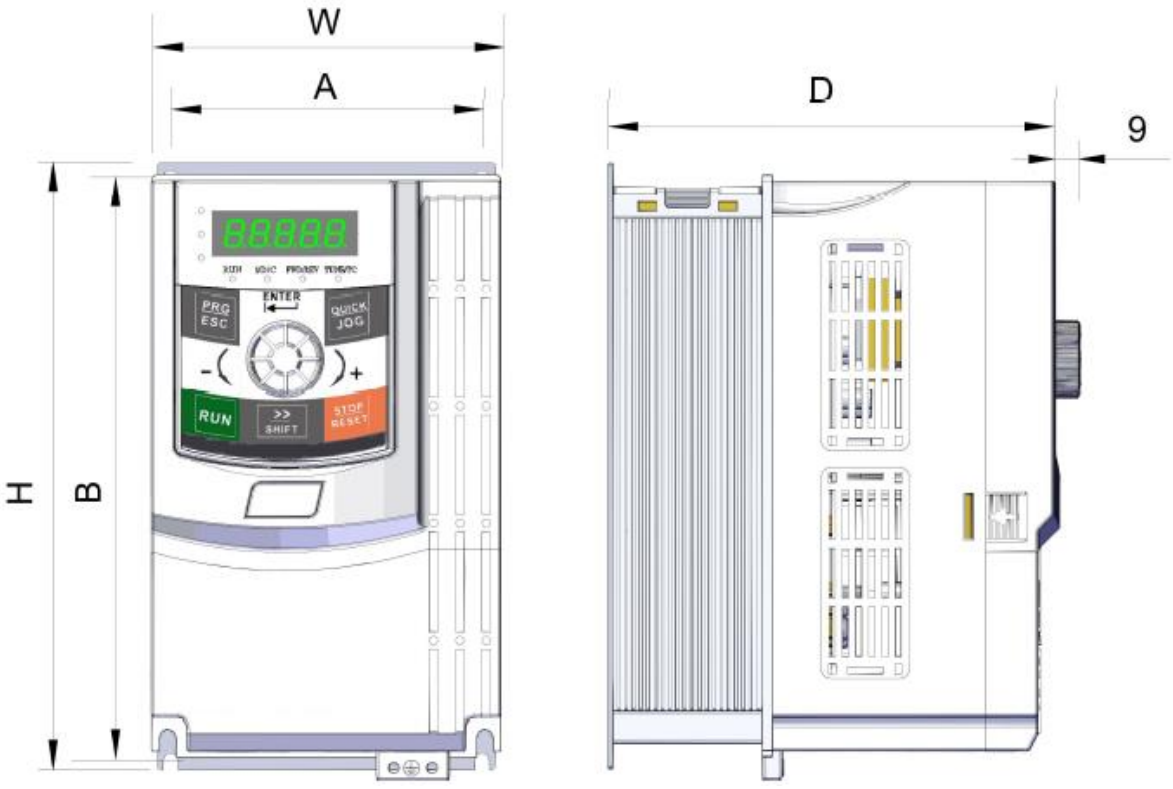

Model Number	W (mm)	H (mm)	D (mm)	A (mm)	B (mm)	Mounting HoleØ	Weight (kg)
SS100-0.4-1Ph-IP20-220	96	172.5	141	78	162	Φ4.5	
SS100-0.75-1Ph-IP20-220	96	172.5	141	78	162	Φ4.5	
SS100-1.5-1Ph-IP20-220	96	172.5	141	78	162	Φ4.5	
SS100-2.2-1Ph-IP20-220	119	206	154	100	199	Φ5	
SS100-4-1Ph-IP20-220	139	268	155.5	120	260	Φ6	
SS100-5.5-1Ph-IP20-220	139	268	155.5	120	260	Φ6	

SS1100 Three Phase Product Dimension

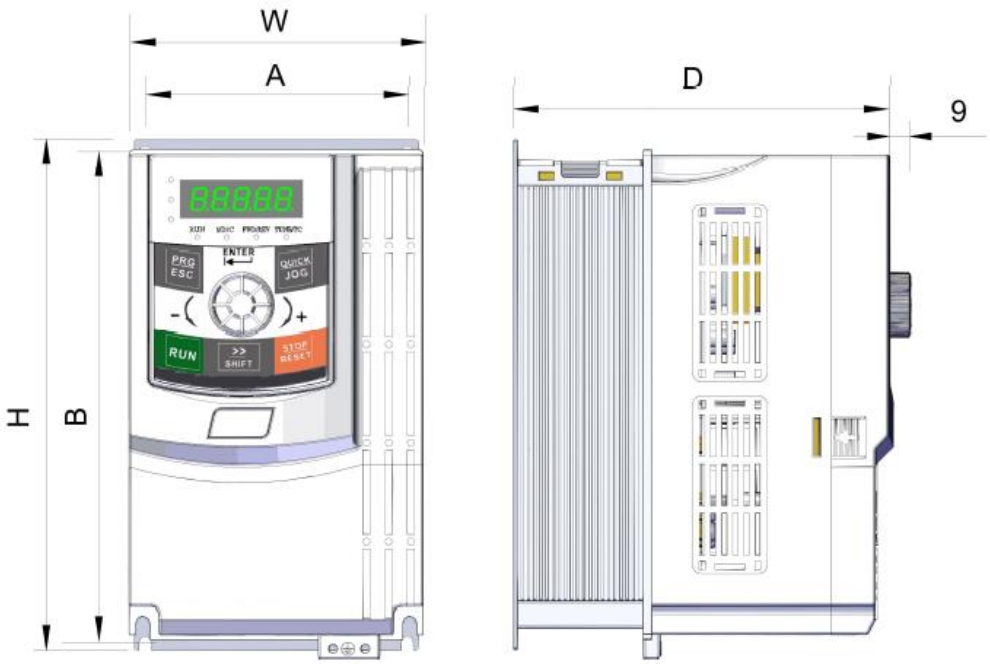

Model Number	W (mm)	H (mm)	D (mm)	A (mm)	B (mm)	Mounting HoleØ	Weight (kg)
SS100-0.75-3Ph-IP20-380	96	172.5	141	76	162	Φ4.5	
SS100-1.5-3Ph-IP20-380	96	172.5	141	80	162	Φ4.5	
SS100-2.2-3Ph-IP20-380	119	206	154	100	199	Φ5	
SS100-5.5-3Ph-IP20-380	119	206	154	100	199	Φ5	
SS100-7.5-3Ph-IP20-380	139	268	155.5	120	260	Φ6	
SS100-9-3Ph-IP20-380	139	268	155.5	120	260	Φ6	
SS100-11-3Ph-IP20-380	188	324	188	150	314	Φ6	
SS100-15-3Ph-IP20-380	188	324	188	150	314	Φ6	
SS100-18.5-3Ph-IP20-380	188	324	188	150	314	Φ6	
SS100-22-3Ph-IP20-380	215	383	200	165	372	Φ6	
SS100-30-3Ph-IP20-380	215	383	200	165	372	Φ6	
SS100-37-3Ph-IP20-380	260	449	209	200	436	Φ7	
SS100-45-3Ph-IP20-380	260	449	209	200	436	Φ7	
SS100-55-3Ph-IP20-380	310	550	260	245	531	Φ10	
SS100-75-3Ph-IP20-380	310	550	260	245	531	Φ10	
SS100-93-3Ph-IP20-380	350	580	267	280	561	Φ10	
SS100-110-3Ph-IP20-380	350	580	267	280	561	Φ10	
SS100-132-3Ph-IP20-380	430	715	295	320	695	Φ10	
SS100-160-3Ph-IP20-380	430	715	295	320	695	Φ10	
SS100-185-3Ph-IP20-380	470	1000	318	360	973	Φ12	
SS100-200-3Ph-IP20-380	470	1000	318	360	973	Φ12	
SS100-220-3Ph-IP20-380	520	1088	338	380	1060	Φ12	
SS100-250-3Ph-IP20-380	650	1220	330	440	1190	Φ12	
SS100-280-3Ph-IP20-380	650	1220	330	440	1190	Φ12	
SS100-315-3Ph-IP20-380	740	1290	420	500	1255	Φ14	
SS100-355-3Ph-IP20-380	740	1290	420	500	1255	Φ14	
SS100-400-3Ph-IP20-380	740	1290	420	500	1255	Φ14	

SS2100 Single Phase Product Dimension

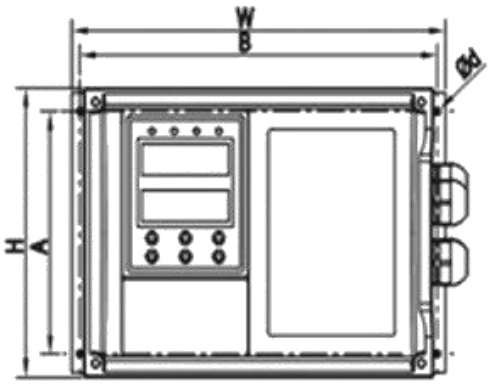

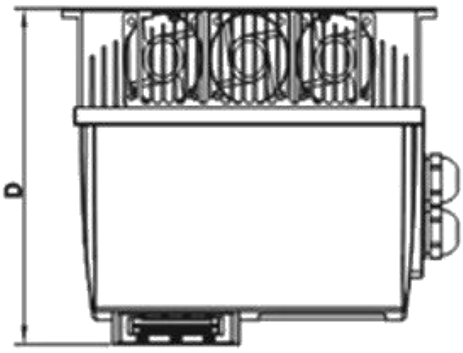

Model Number	W (mm)	H (mm)	D (mm)	A (mm)	B (mm)	Mounting HoleØ	Weight (kg)
SS2100-0.75-1Ph-IP65-220	188	122	134	105	178	Φ4	1.6
SS2100-1.5-1Ph-IP65-220	188	122	134	105	178	Φ4	1.6
SS2100-2.2-1Ph-IP65-220	188	122	134	105	178	Φ4	1.6

SS2100 Three Phase Product Dimension

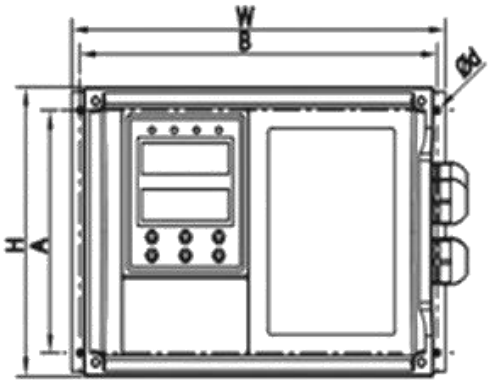

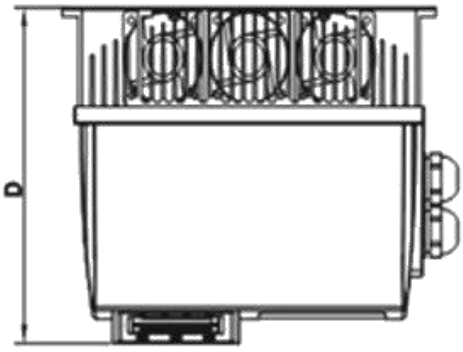

Model Number	W (mm)	H (mm)	D (mm)	A (mm)	B (mm)	Mounting HoleØ	Weight (kg)
SS2100-0.75-3Ph-IP65-380	188	122	134	105	178	Φ4	1.6
SS2100-1.5-3Ph-IP65-380	188	122	134	105	178	Φ4	1.6
SS2100-2.2-3Ph-IP65-380	188	122	134	105	178	Φ4	1.6
SS2100-3.7-3Ph-IP65-380	235	154	179	129	225	Φ4	2.9
SS2100-5.5-3Ph-IP65-380	235	154	179	129	225	Φ4	3
SS2100-7.5-3Ph-IP65-380	235	154	179	129	225	Φ4	3
SS2100-11-3Ph-IP65-380	235	154	179	129	225	Φ4	3.1

SHD71 Single Phase Wiring Diagram

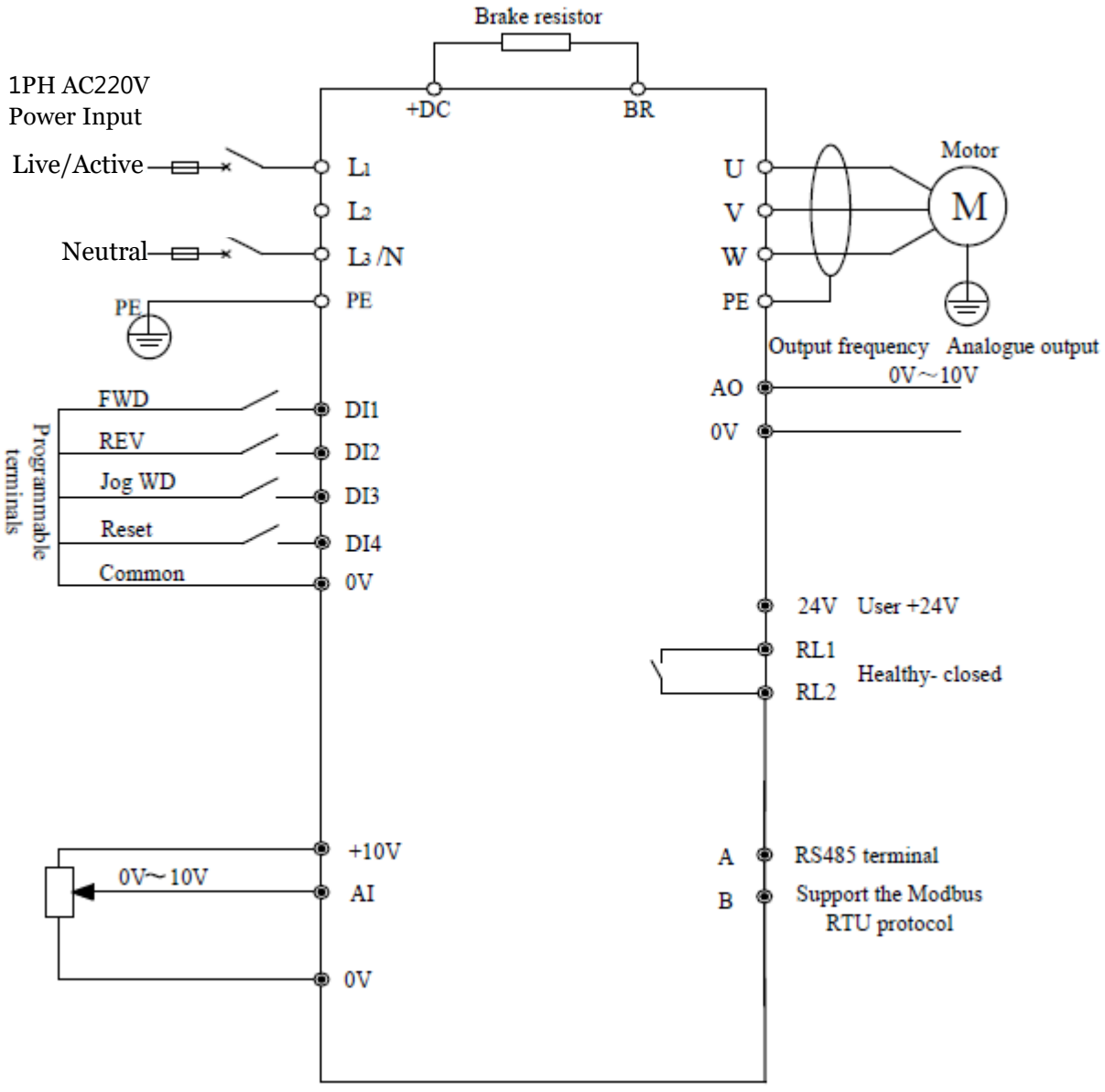

SHD700 Single Phase Wiring Diagram

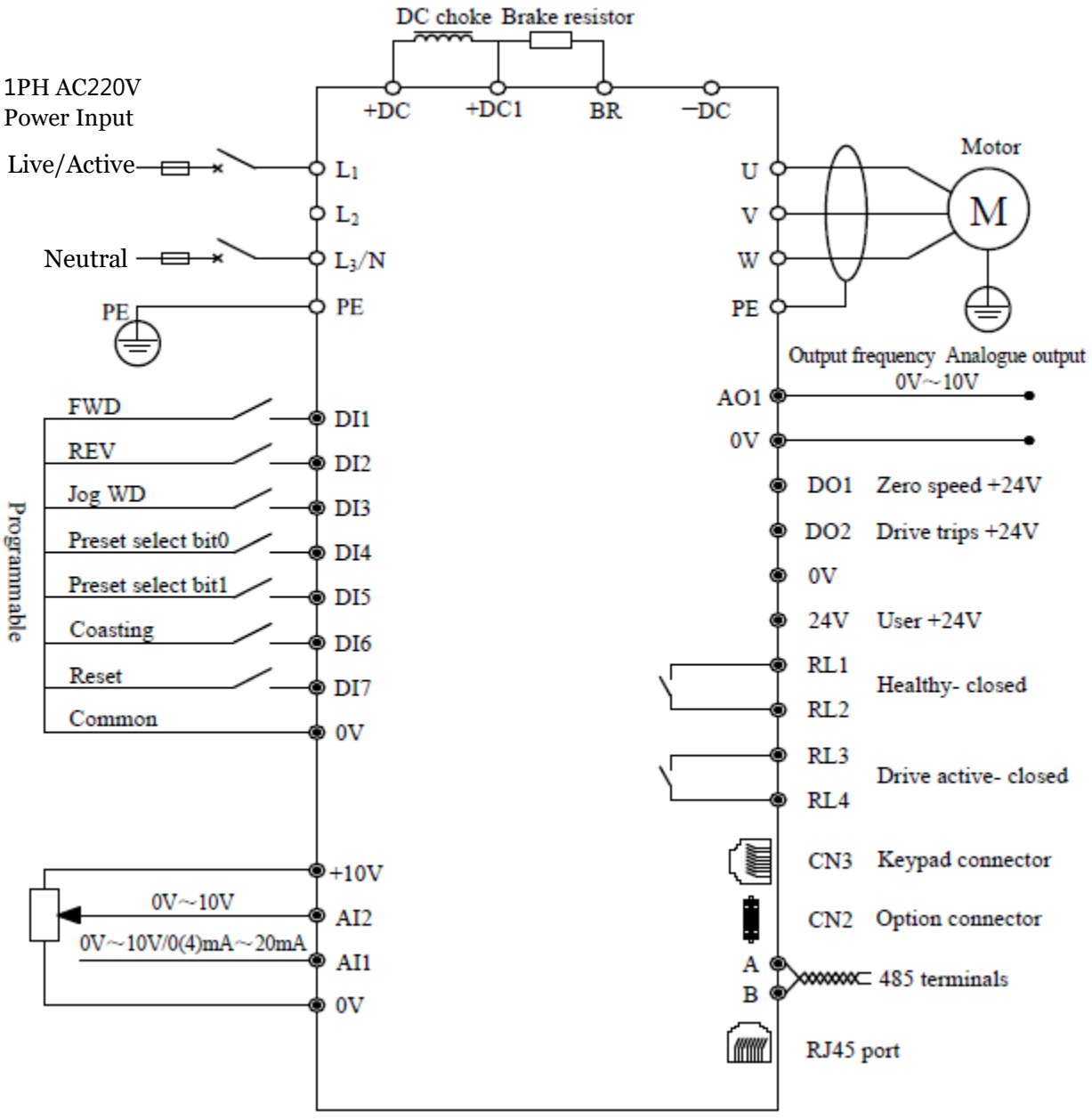

SS900 Single Phase Wiring Diagram

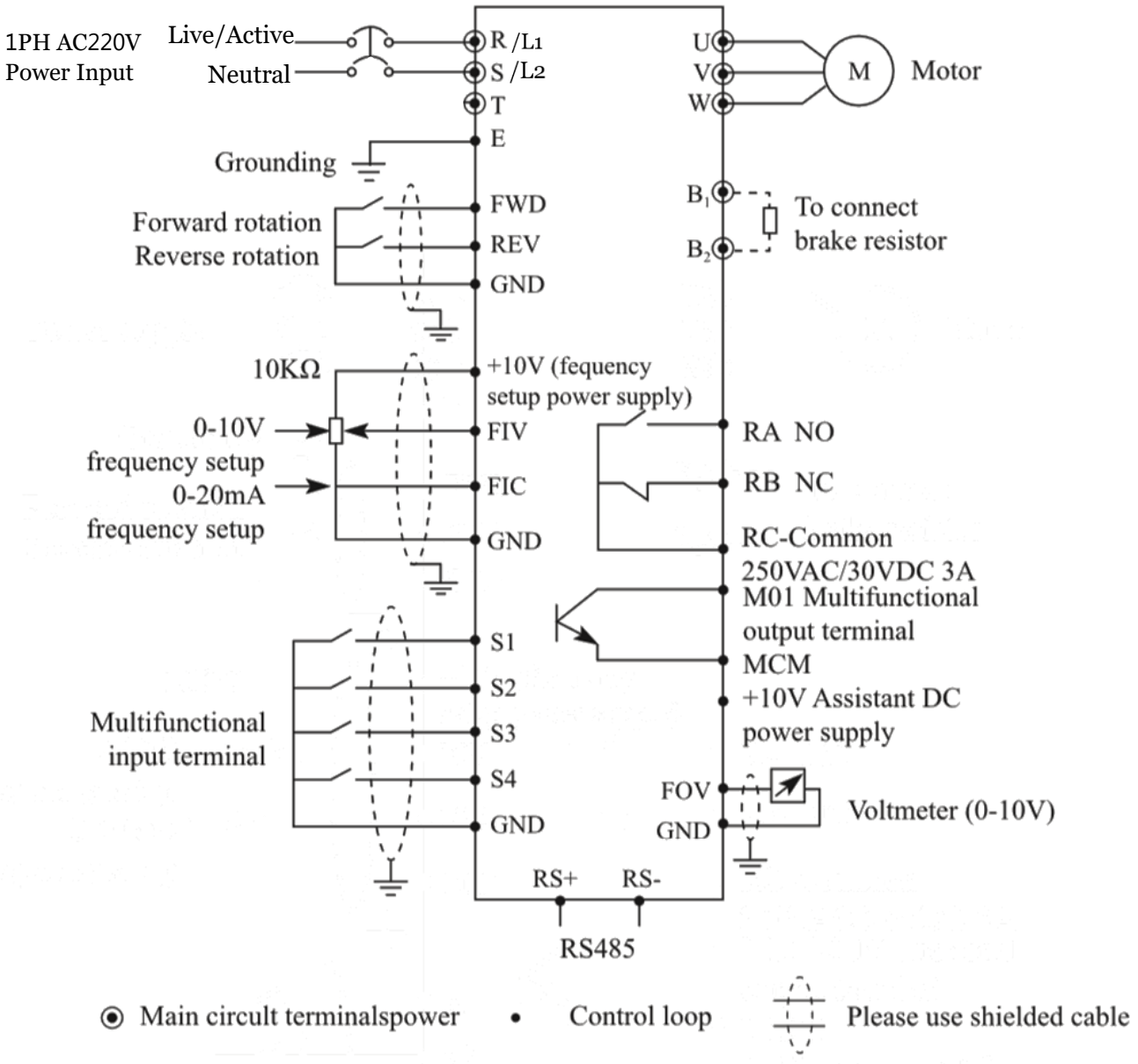

SS1100 0-1.5kW Single Phase Wiring Diagram

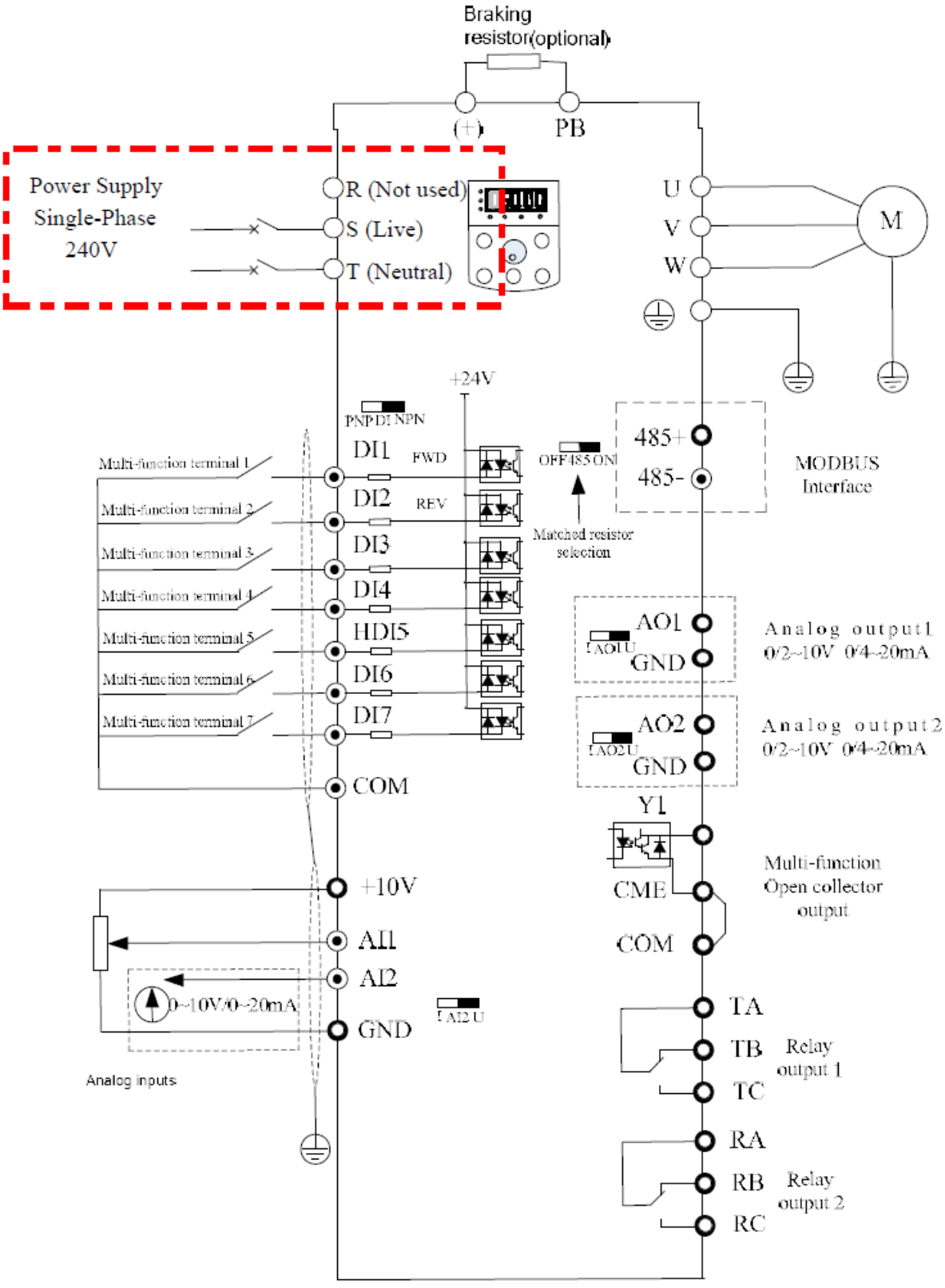

SS1100 1.5-5.5kW Single Phase Wiring Diagram

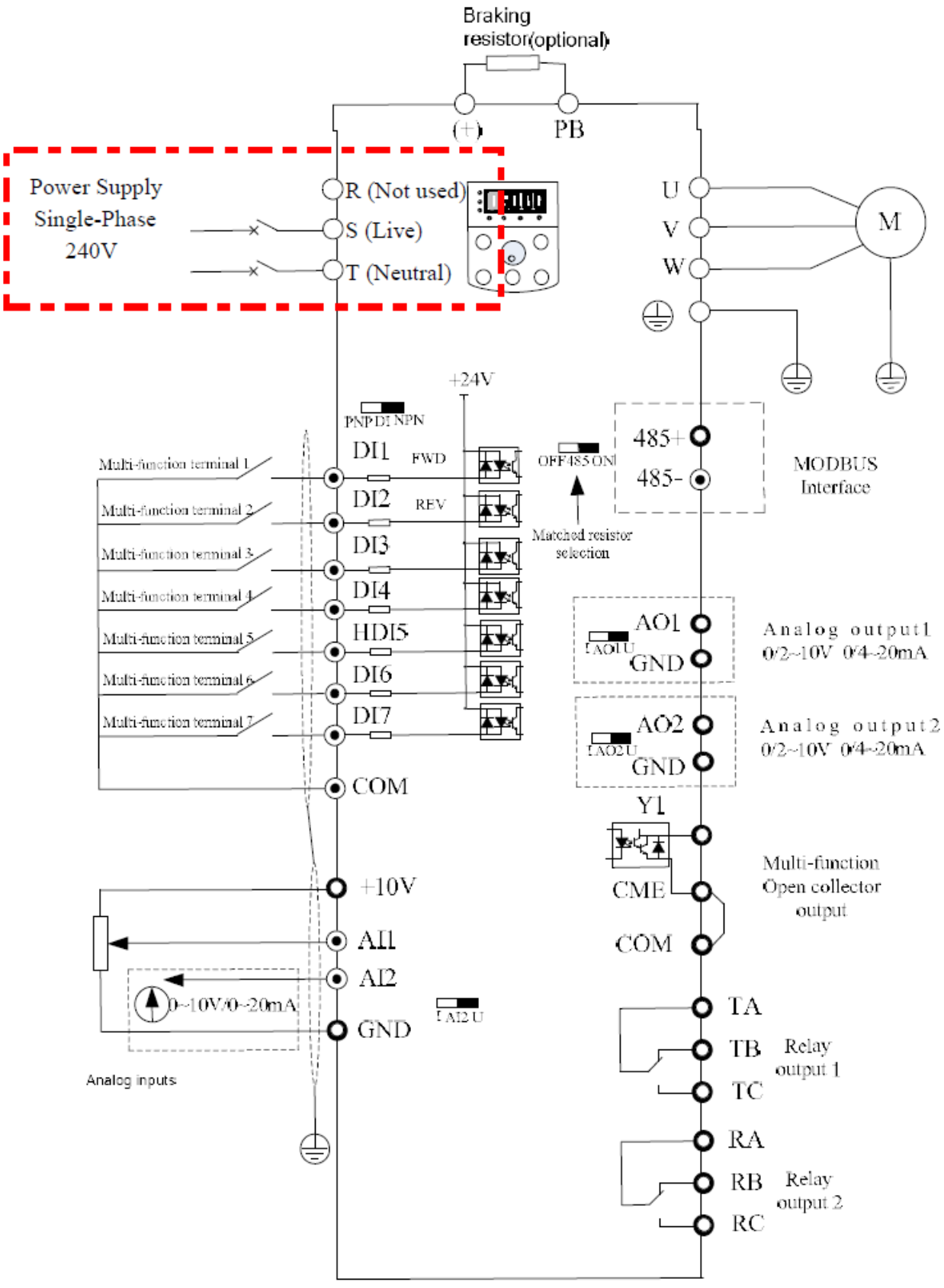

SS2100 0.75-2.2kW Single Phase Wiring Diagram

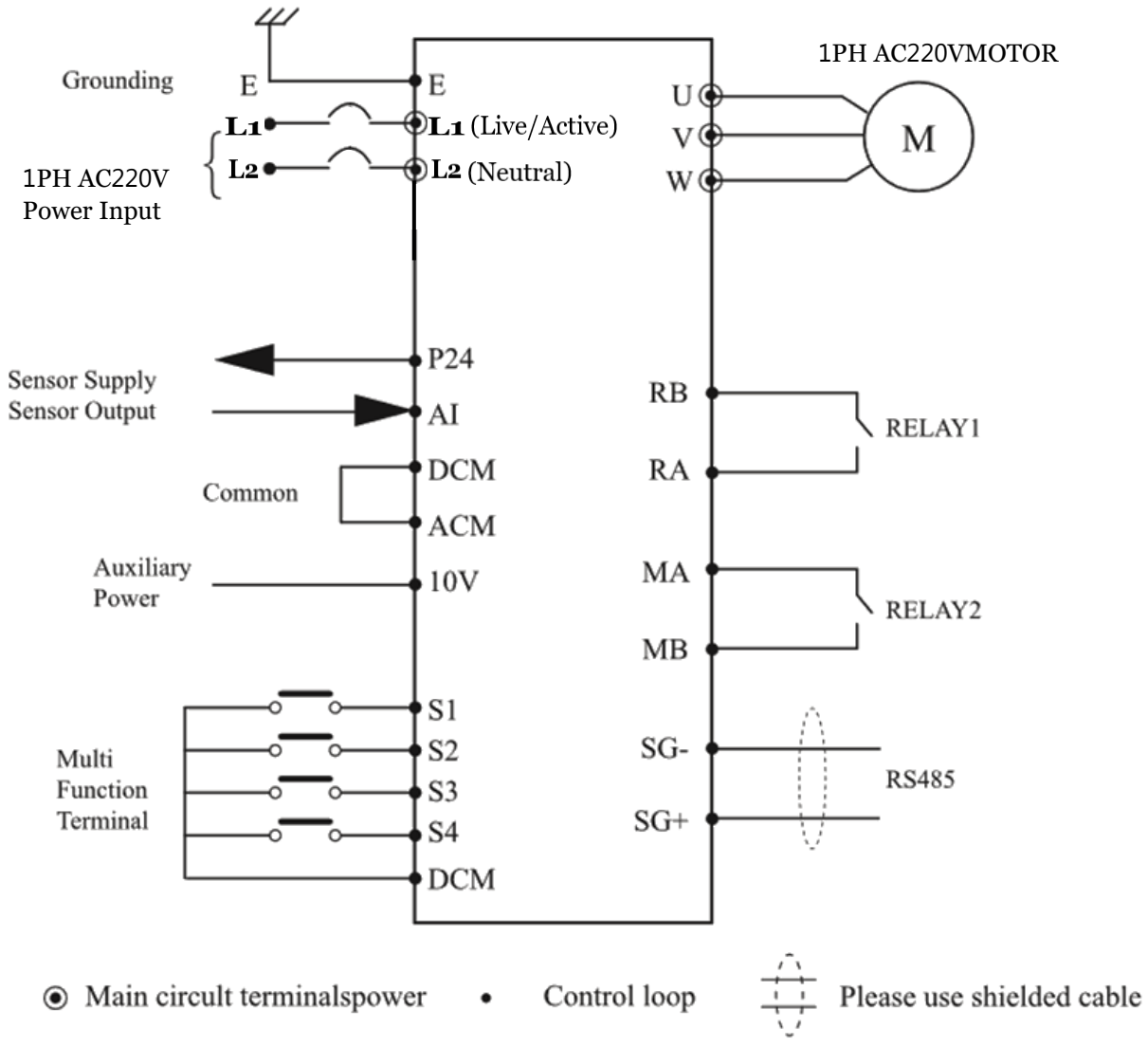

SHD71 Three Phase Wiring Diagram

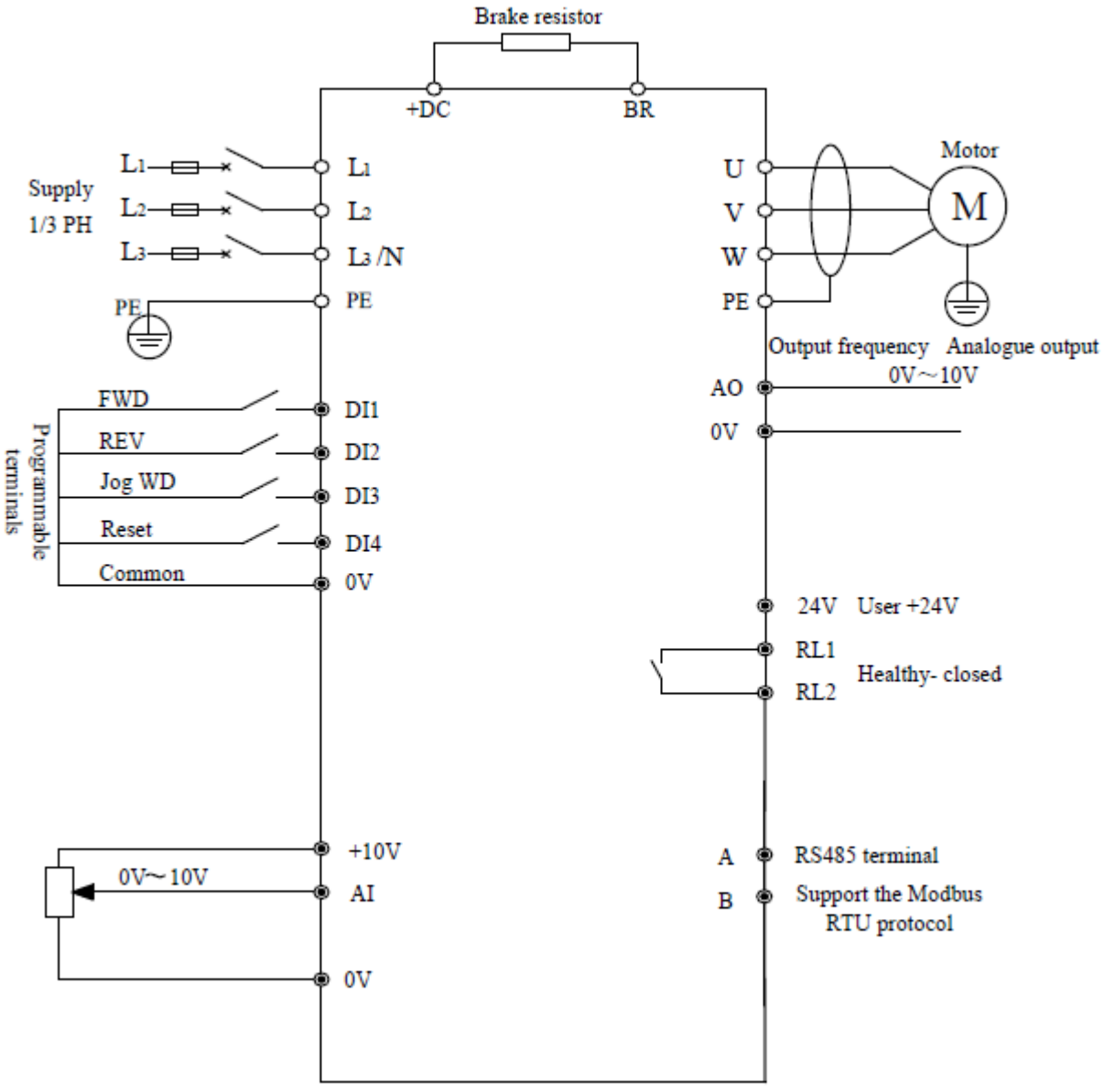

SHD700 Three Phase Wiring Diagram

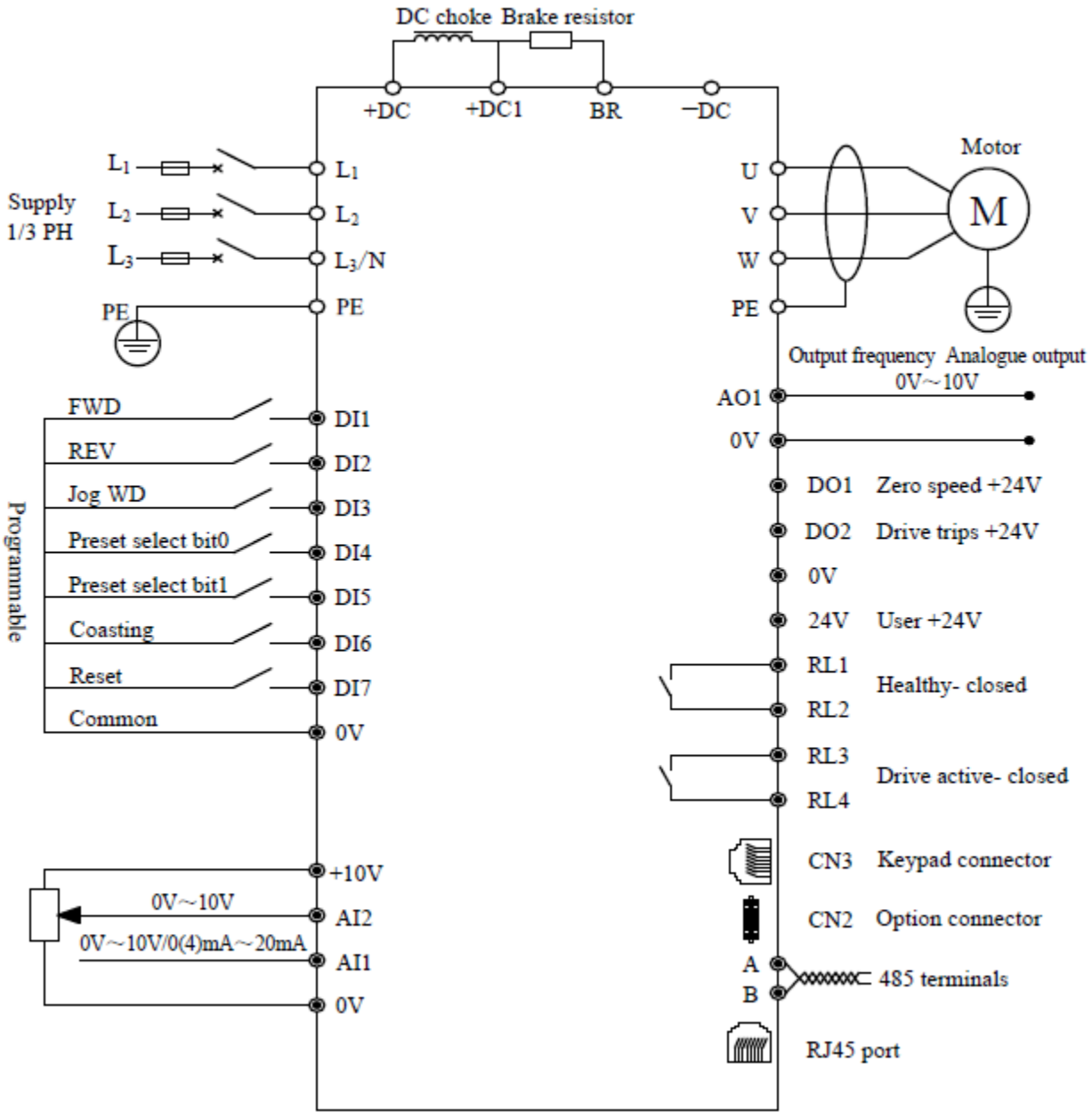

SS900 Three Phase Wiring Diagram

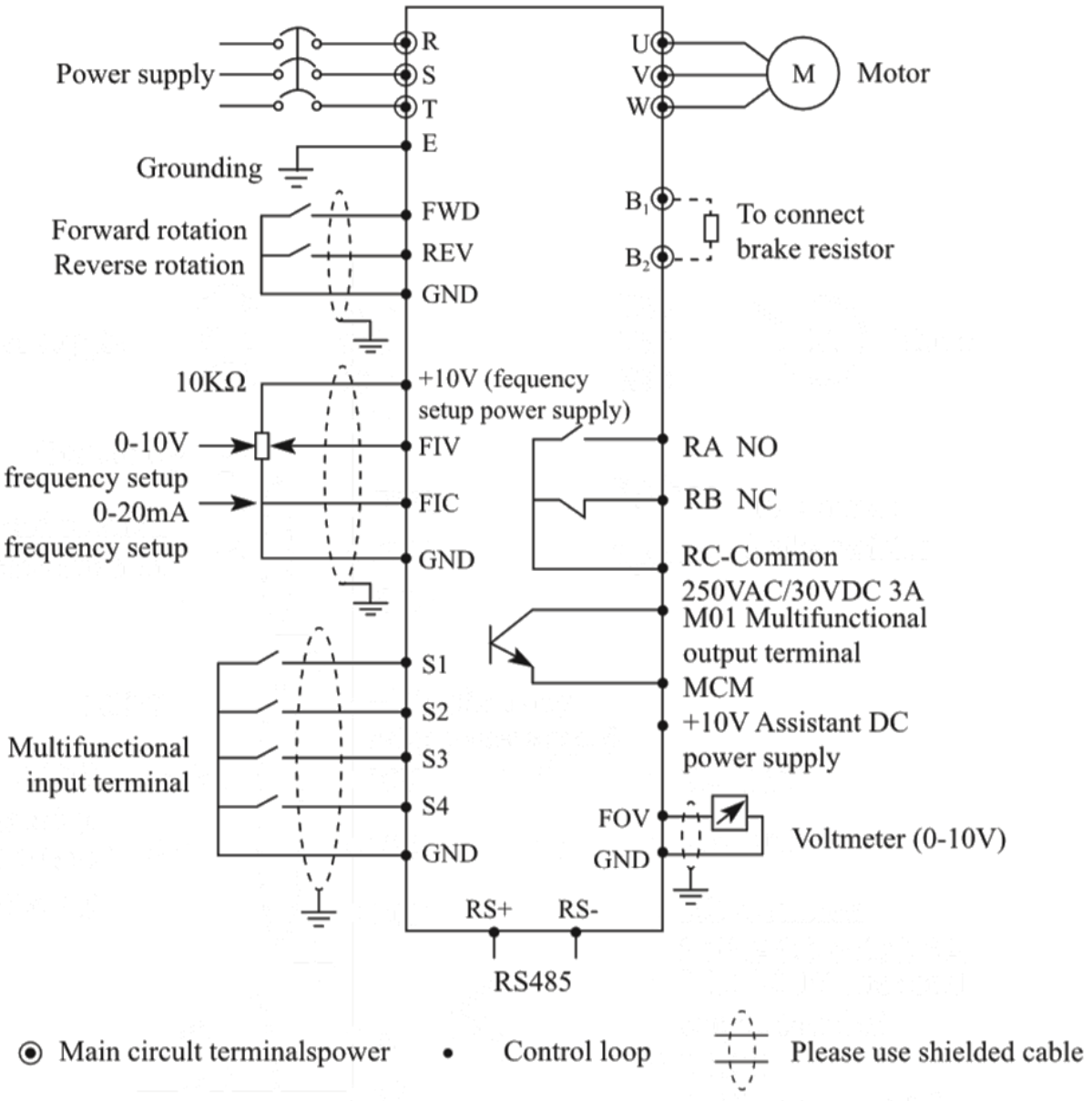

◉ Main circuit terminalspower • Control loop Please use shielded cable

SS1100 0-1.5kW Three Phase Wiring Diagram

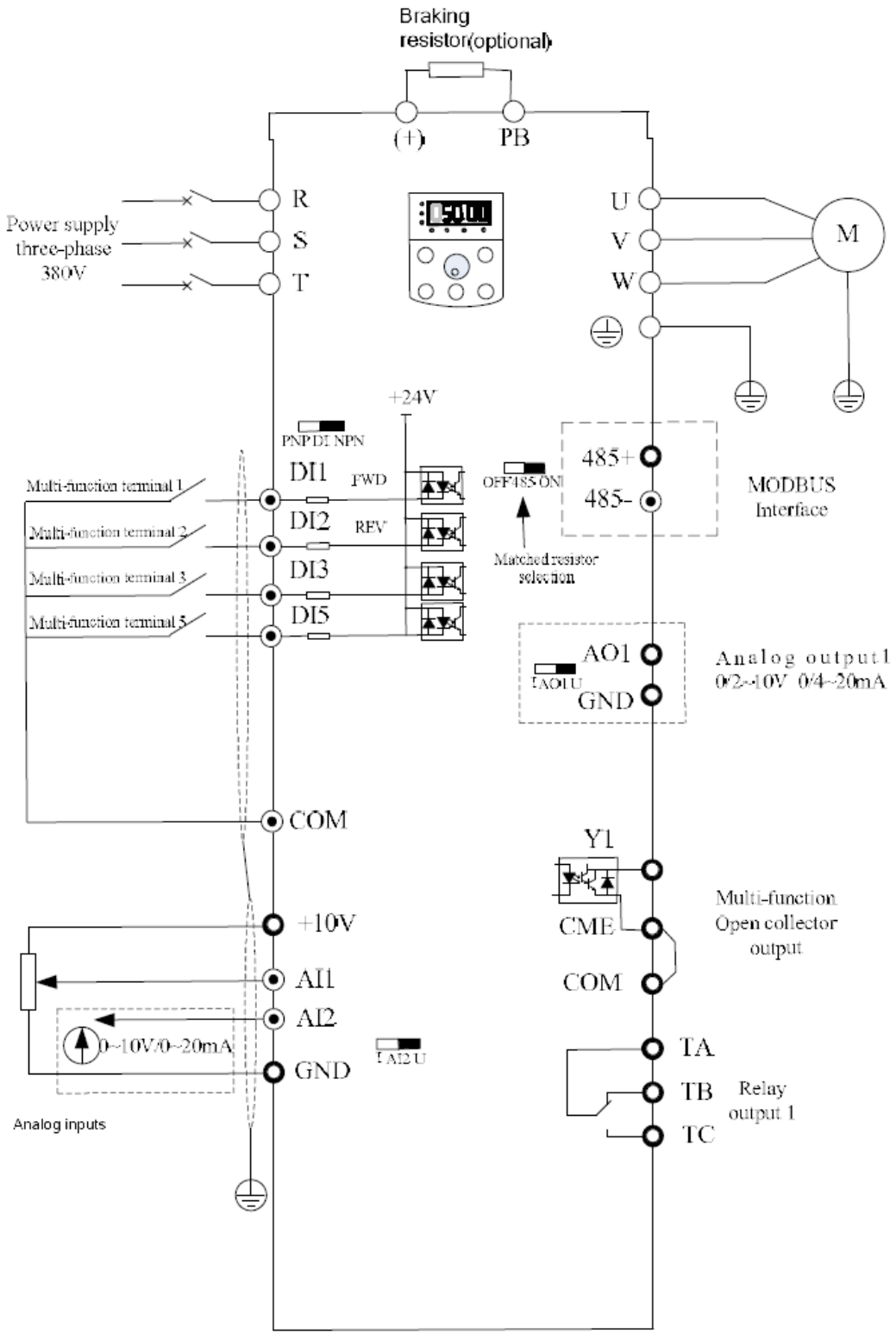

SS1100 1.5-22kW Three Phase Wiring Diagram

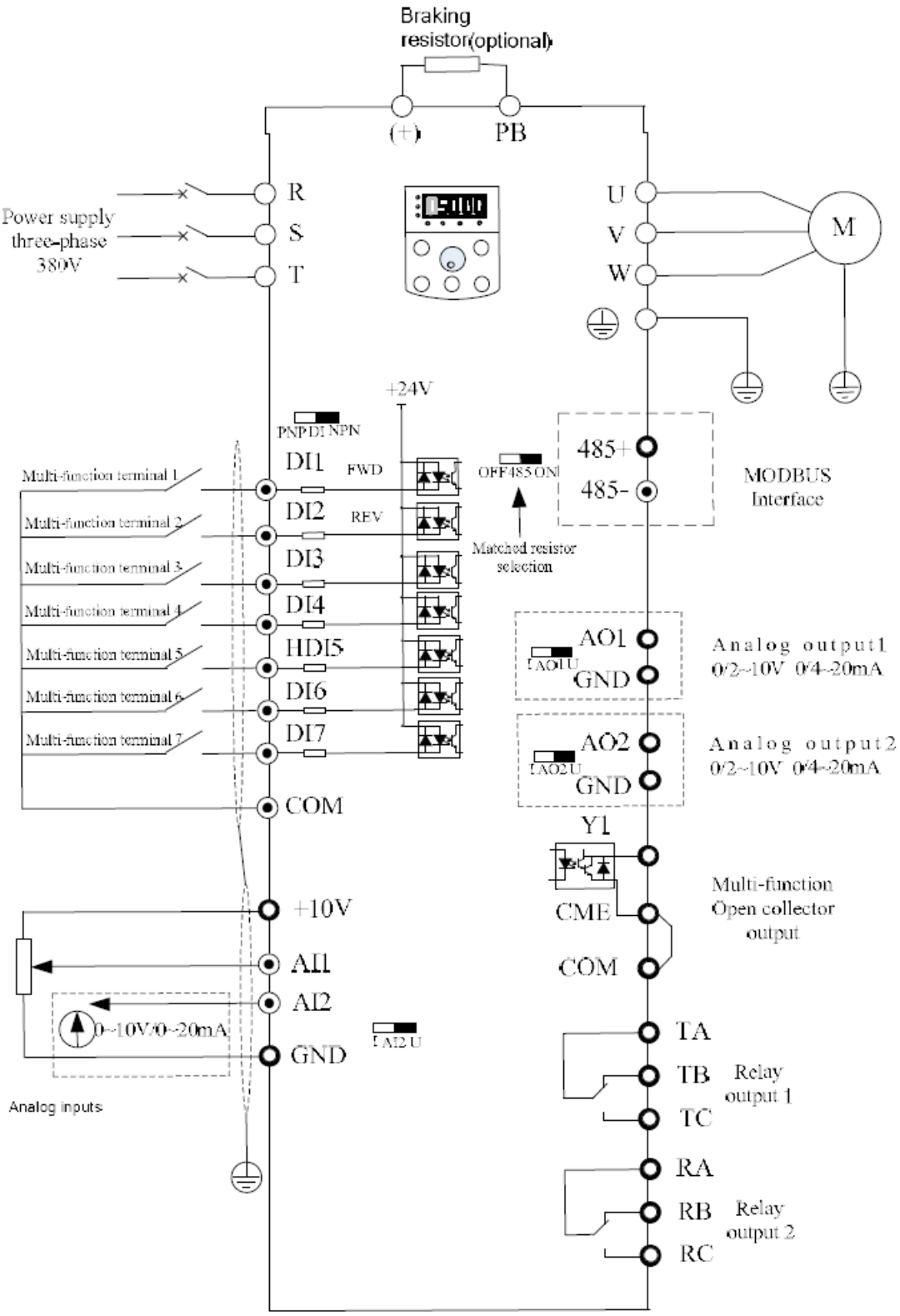

SS1100 30-55kW Three Phase Wiring Diagram

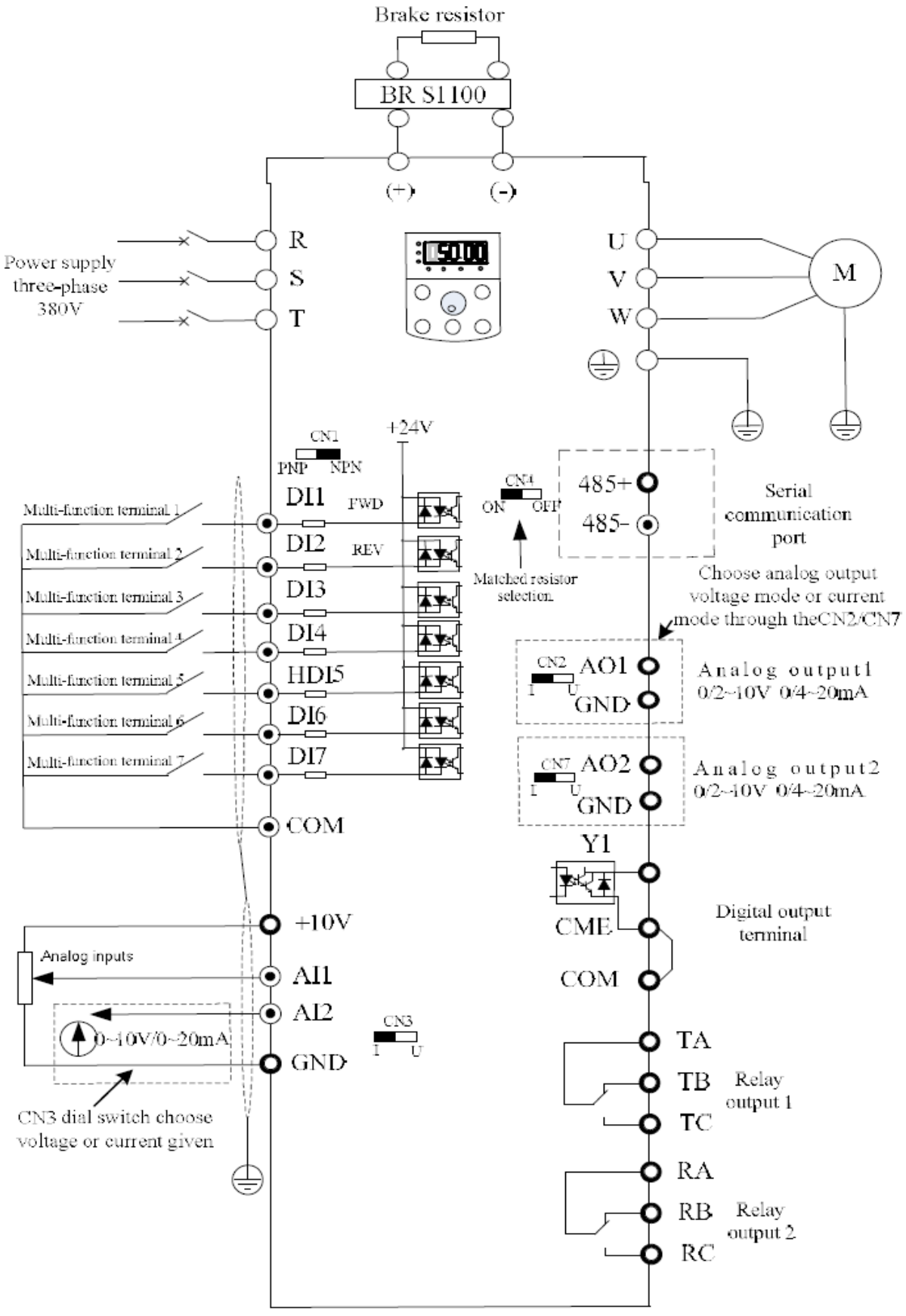

SS1100 75-400kW Three Phase Wiring Diagram

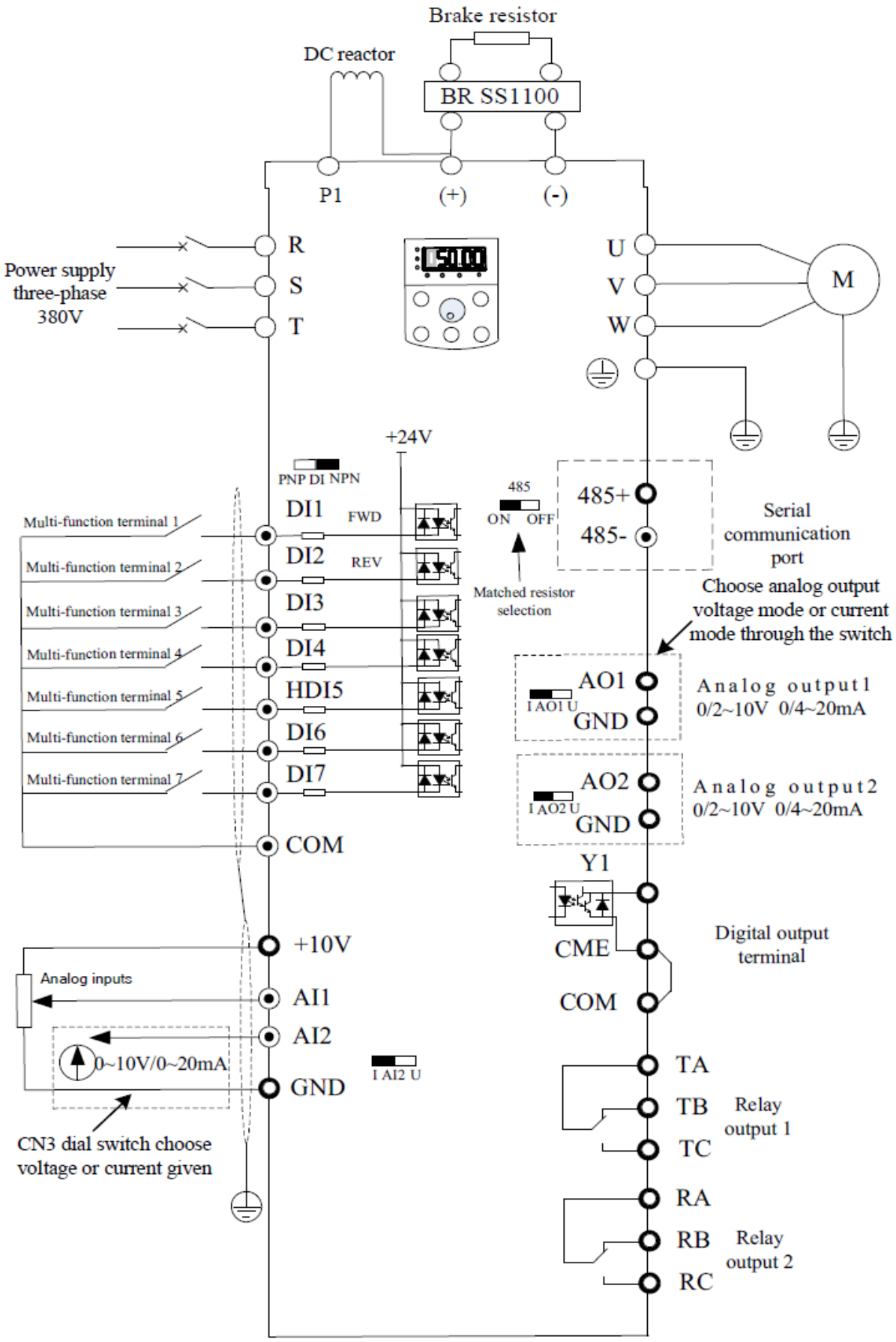

SS2100 0.75-2.2kW Three Phase Wiring Diagram

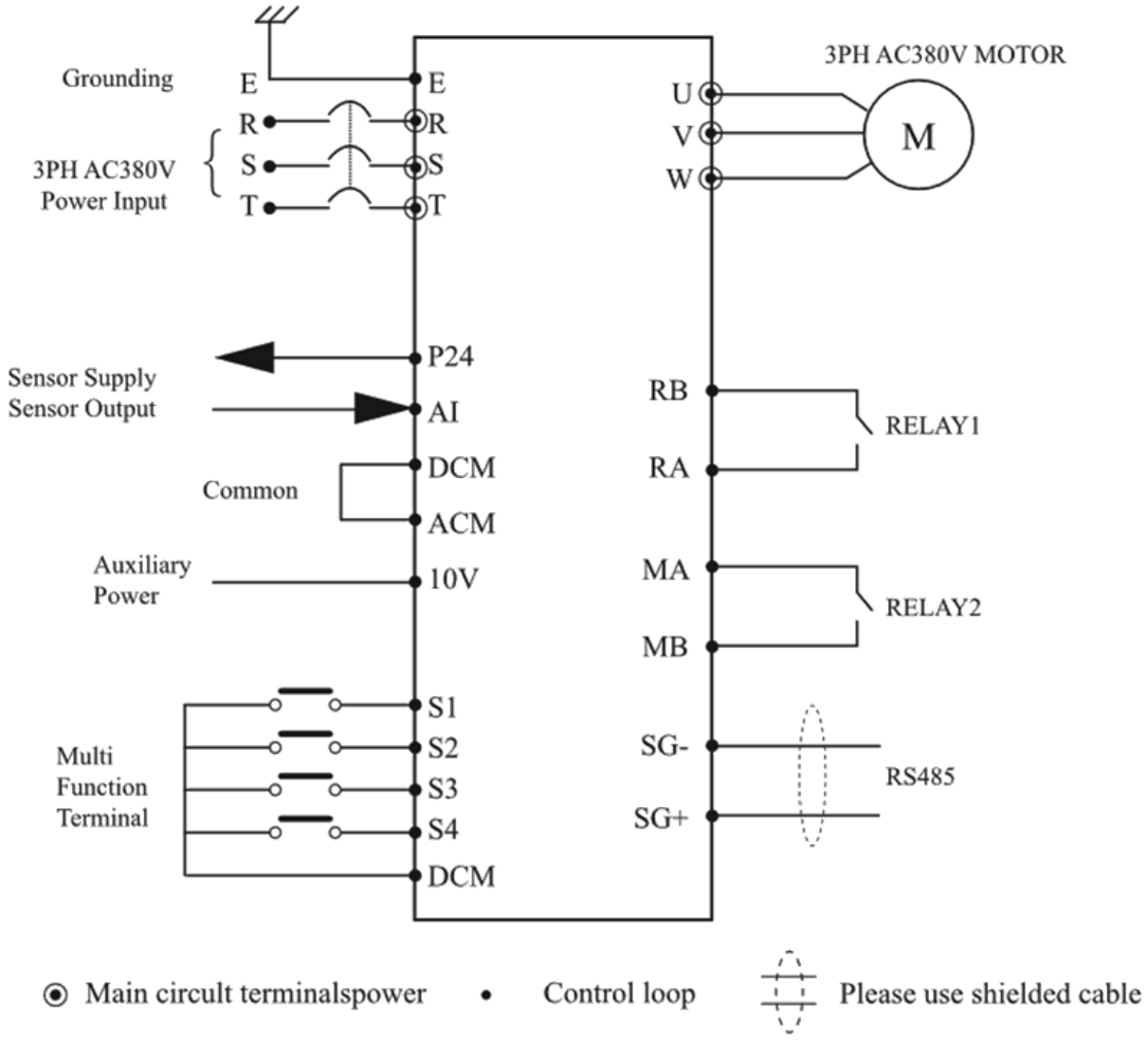

◉ Main circult terminalspower • Control loop Please use shielded cable
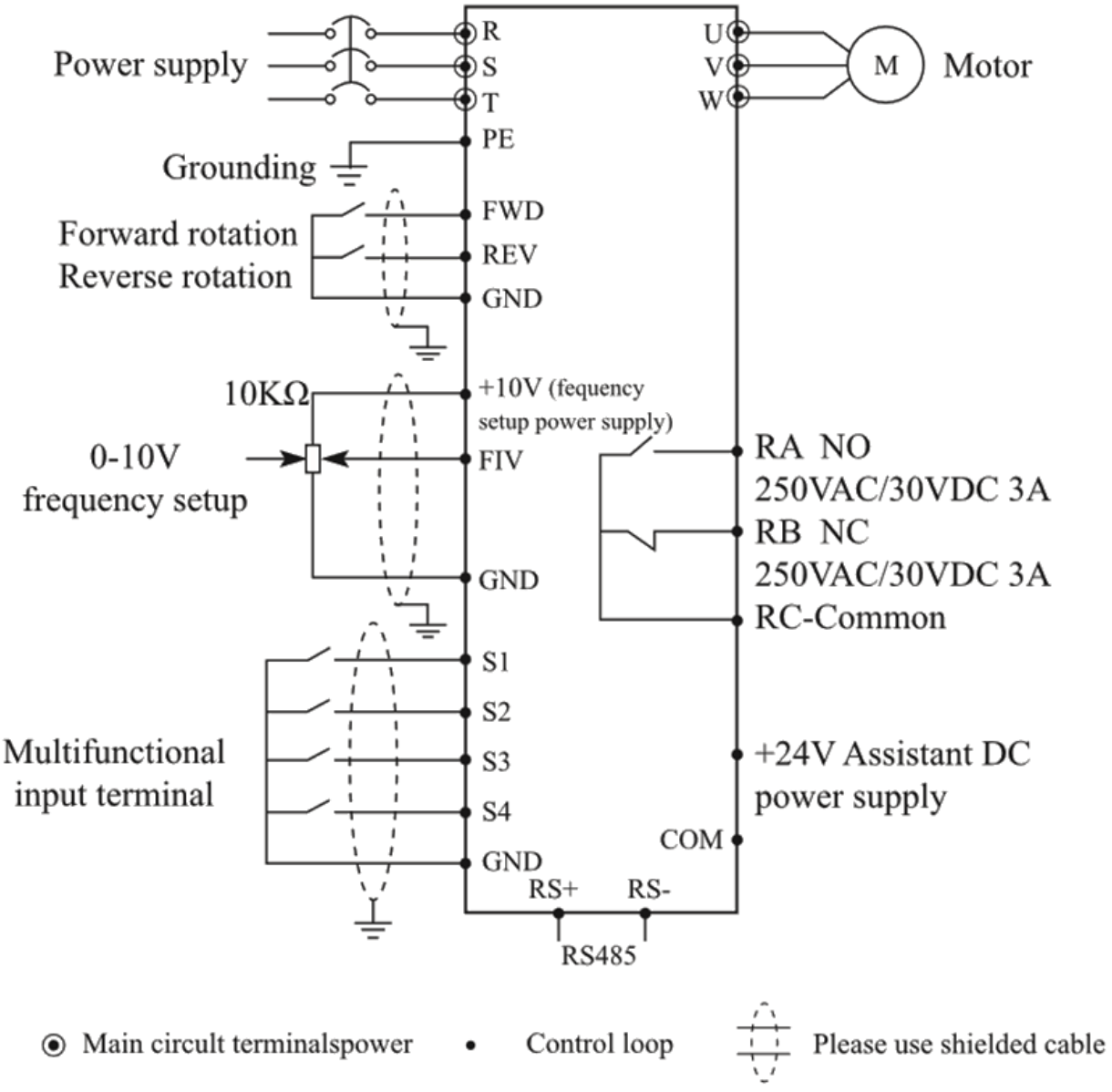
SS2100 3.7-11kW Three Phase Wiring Diagram